Technical data sheet

Height-adjustable cassette for inspection opening, RKR, brass

Item number: 7409124

Height-adjustable "blank" cassette for the creation of an inspection opening of nominal size R9 in dry or wet-cleaned floors for indoor use. Only suitable for smooth floor coverings.
Height-adjustable cassette as a blind cassette, 3-compartment. 3 APMT5 cover plates can be installed. For the installation of 3 UT4 universal supports for 9 individual installation devices with support ring/support clamp or 12 Modul 45 devices.

CuZn 37 Brass

Master data

Item number	7409124
Type	RKRN2 R9 MS25
Description 1	Round cassette
Description 2	blank
Manufacturer	OBO
Dimension	Ø305mm
Material	Brass
Smallest sales unit	1
Unit of quantity	Piece
Weight	796 kg
Weight unit	kg/100 pc.
CO2 Footprint (GWP) Cradle-to-Gate	14,7335 kg CO2e / 1 Piece

Technical data sheet

Height-adjustable cassette for inspection opening, RKR, brass

Item number: 7409124

Dimensions

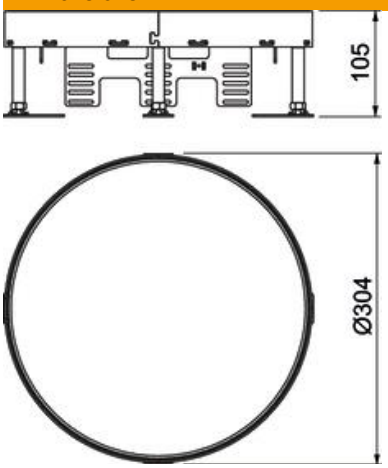

Length	304 mm
Width	304 mm

Technical data

Number of installable devices	0
Number of mounting boxes	3
Number of cable outlets	0
Cover version	Round
Cable outlet version	No cable outlet
Floor care	Wet
Decouplable	no
Floor height, max.	155 mm
Floor height, min.	105 mm
Suitable for raised floor installation	yes
Suitable for cavity floor installation	yes
Suitable for underfloor box	350
Device support to accept mounting boxes	no
Nominal size for device installation units	R9
Height-adjustment range, max.	155 mm
Height-adjustment range, min.	105 mm
ROHS-conformant	Exempt
Protection rating (IP) when used	IP00
Protection rating (IP) when unused	IP44
Protection rating IK code	IK10
Heavy-duty version	no
Installation system type	UT4
Vertical load, large area	to 5,000 N
Vertical load, small area	to 3,000 N
Approvals	VDE
Floor covering thickness	25 mm