Technical data sheet

Extension unit for GES4, height 100−150 mm

Item number: 7424920

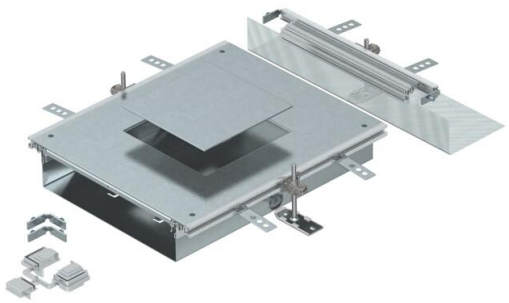

Ready-to-mount trunking extension unit with a device installation lid for the installation of an installation unit of nominal size 4, consisting of the trunking base (floor trough with side and floor covering guide profiles), trunking lid with blank mounting opening and a flushfloor end cover. The scope of delivery contains three height-adjustable wall fixing brackets, three screed anchors and trunking connection brackets.
Size of the mounting unit suitable for the installation of a square installation unit of nominal size 4.

St	Steel
FS	Strip galvanised

Master data

Item number	7424920
Type	OKA-W A 10050 4
Description 1	Extension unit
Description 2	for OKA-W
Manufacturer	OBO
Material	Steel
Surface	Strip galvanised
Surface standard	DIN EN 10346
Smallest sales unit	1
Unit of quantity	Piece
Weight	976 kg
Weight unit	kg/100 pc.
CO2 Footprint (GWP) Cradle-to-Gate	50,532 kg CO2e / 1 Piece

Technical data sheet

Extension unit for GES4, height 100−150 mm

Item number: 7424920

Dimensions

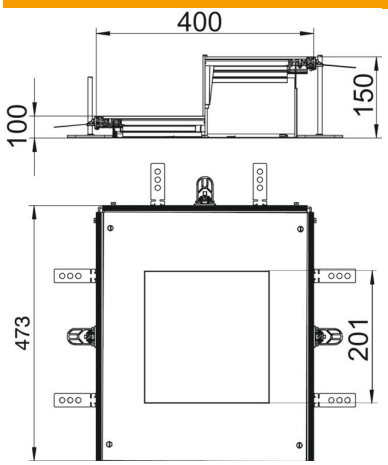

Length	473 mm
Width	400 mm
Dimension a	201 mm
Dimension A	400 mm
Dimension h	100 mm

Technical data

Mounting opening cover	yes
Covers	1
Number of mounting openings	1
Floor plate	no
Cover fastening, locking	no
Seal installation option	yes
Installation opening for on-floor tank	no
Installation opening for flush-mount unit	Square
Decouplable	no
Suitable for expansion joint	no
Suitable for screed-flush closed underfloor ducts	no
Suitable for flushfloor, open underfloor trunking	yes
Suitable for screed-covered underfloor ducts	no
Trunking height, max.	150 mm
Duct height, min.	100 mm
Cover material thickness	4
Minimum screed height	100
With connection opening	yes
With equipotential bonding	no
With separating retainer	no
With overhang	yes
Mounting opening	For service outlet
Nominal size for device installation units	4
Height-adjustment range, max.	150 mm
Height-adjustment range, min.	100 mm
Removable cover	yes
ROHS-conformant	Exempt